Bachelor of Science in Computer Science

It is required that a minor be selected. Pre-Requisites will depend on the program chosen.

(Recommended minors: Math, Digital Information Design, Risk Assurance, Accounting, and Business Administration)

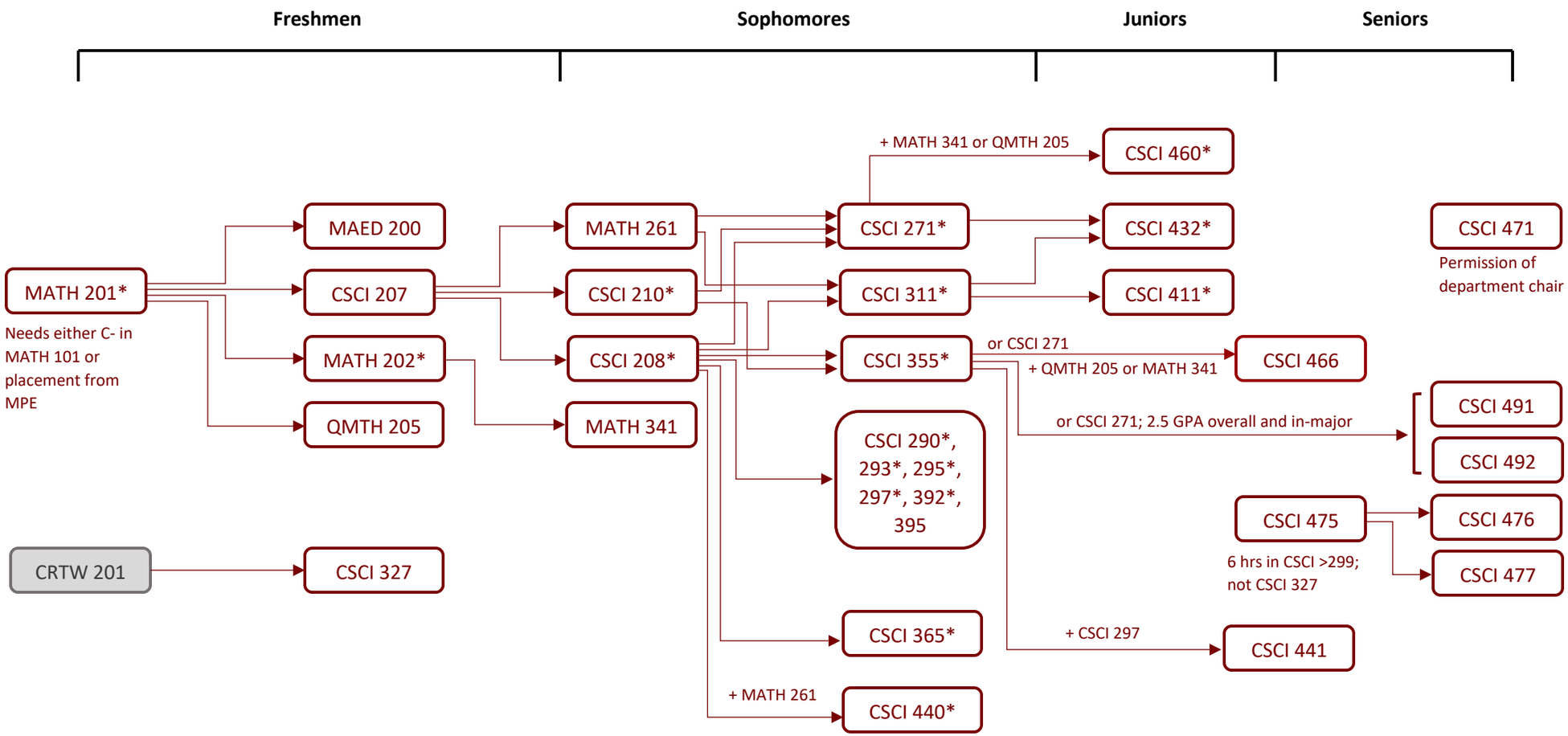

Please refer to **Course Offerings** for all prerequisites regarding classes with the following designators: MATH, BIOL, CHEM, GEOL, etc. as a part of this degree. This can be found at www.winthrop.edu/recandreg/courseinformation.aspx

*Any class marked with a * means the pre-requisites need to be passed with at least a C-.*